HC0812W03

Preliminary Data sheet

Hybrid Coupler 3 dB, 90°

Rev A0

Description

High-power broadband surface-mounted and embedded coupler series, realizing the power synthesis and distribution of microwave high-power amplifier system, signal acquisition and other functions. Used in active phased array radar, microwave transceiver components, microwave amplifiers, radio stations, satellite communications and other projects, to provide standardized and customized high-quality and reliable products.

The performance and reliability indexes are in line with international products,and the pin definition and package size are compatible with international products, realizing 100% in-situ replacement.

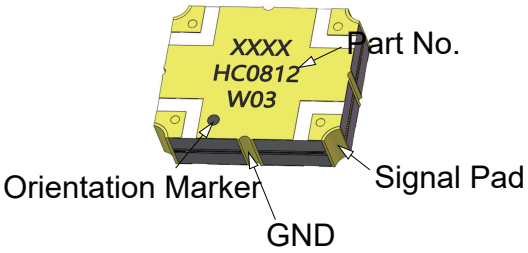

Features:

- 6000– 12000MHz
- AMPS
- High Power
- Very Low Loss
- Tight Amplitude Balance
- High Isolation
- Low VSWR
- Good Repeatability
- CTE compatible with FR4, G-10, RF-35, RO4350B and polyimide
- Immersion gold, prevent surface oxidation & scratch
- RoHS Compliant
- Tape & Reel Package available

Electrical Specifications

Frequency	Isolation	Insertion Loss	VSWR	Amplitude Balance
MHz	*dB Min*	*dB Max*	*Max : 1*	*dB Max*
6000 - 12000	17.5	0.35	1.43	± 0.30

Phase Balance	Power	Operating Temp.
Degrees	*Avg. CW Watts*	*°C*
90 ± 4.0	50	-55 to +85

Notes:
1. All the above data are based on specified demo board.
2. Insertion loss:Thru board loss has been removed.

Mechanical Outline

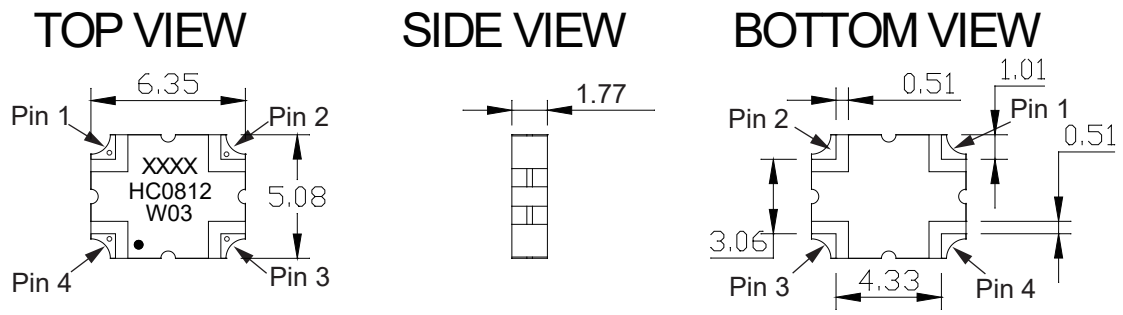

Notes: 1. All dimensions show in millimeters
2. RoHS Compliant in accordance with EU Directive(2011/65/EU)
3. Dimension tolerance: ±0.20

Yantel Corporation

Add: 3F, Building 3, Southern District 2 of Zhongguan Honghualing Industrial Park, Xili, Nanshan, Shenzhen, China
Tel: 86-755-8355-1886 Fax: 86-755-8355-2533
For detailed performance specs & shopping online see Yantel web site : www.yantel-corp.com

Hybrid Coupler Pin Configuration

The HC0812W03 has an orientation marker to denote Pin 1. Once port one has been identified the other ports are known automatically. Please see the chart below for clarification:

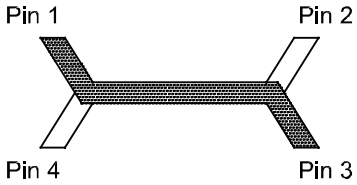

Configuration	Pin 1	Pin 2	Pin 3	Pin 4
Splitter	Input	Isolated	-3dB $\angle\theta-90$	-3dB $\angle\theta$
Splitter	Isolated	Input	-3dB $\angle\theta$	-3dB $\angle\theta-90$
Splitter	-3dB $\angle\theta-90$	-3dB $\angle\theta$	Input	Isolated
Splitter	-3dB $\angle\theta$	-3dB $\angle\theta-90$	Isolated	Input
***Combiner**	A$\angle\theta-90$	A$\angle\theta$	Isolated	Output
***Combiner**	A$\angle\theta$	A$\angle\theta-90$	Output	Isolated
***Combiner**	Isolated	Output	A$\angle\theta-90$	A$\angle\theta$
***Combiner**	Output	Isolated	A$\angle\theta$	A$\angle\theta-90$

*Note: "A" is the amplitude of the applied signals. When two quadrature signals with equal amplitudes are applied to the coupler as described in the table, they will combine at the output port. If the amplitudes are not equal, some of the applied energy will be directed to the isolated port.

Definition of Measured Specifications

Parameter	Definition	Mathematical Representation
VSWR (Voltage Standing Wave Ratio)	The impedance match of the coupler to a 50Ω system. A VSWR of 1:1 is optimal.	$VSWR = \frac{V_{max}}{V_{min}}$ Vmax = voltage maxima of a standing wave Vmin = voltage minima of a standing wave
Return Loss	The impedance match of the coupler to a 50Ω system. Return Loss is an alternate means to express VSWR.	Return Loss (dB)= $20\log \frac{VSWR+1}{VSWR-1}$
Insertion Loss	The input power divided by the sum of the power at the two output ports.	Insertion Loss(dB)= $10\log \frac{P_{in}}{P_{cpl}+P_{transmission}}$
Isolation	The input power divided by the power at the isolated port.	Isolation(dB)= $10\log \frac{P_{in}}{P_{iso}}$
Phase Balance	The difference in phase angle between the two output ports.	Phase at coupled port – Phase at transmisson port
Amplitude Balance	The power at each output divided by the average power of the two outputs.	$10\log \frac{P_{cpl}}{\left(\frac{P_{cpl}+P_{transmission}}{2}\right)}$ and $10\log \frac{P_{transmission}}{\left(\frac{P_{cpl}+P_{transmission}}{2}\right)}$

Test Method

1. Calibrating your vector network analyzer.
2. Connect the VNA 4 Port to DUT respectively.
3. Measure the data of coupling through port 1 to port 4(S41).
4. Measure the data of transmission through port 1 to port 3(S31).
5. Measure the data of isolation through port 1 to port 2(S21).
6. Measure the data of phase port 4 & port 3(port 1 feeding).
7. Measure the data of return loss port 1, port 2, port 3 & port 4.
8. According to the above data to calculate insertion loss, amplitude balance & phase.

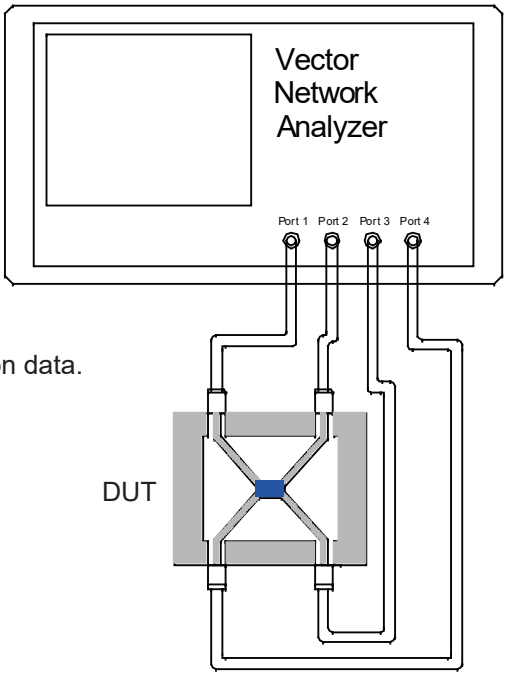

Note:

1. When calculating insertion loss at room temperature, demo board loss should be removed from both coupling & transmission data.

Please refer to the below table for demo board loss :

Frequency Range(MHz)	Demo Board Loss (dB) @25℃
470-860	0.07
800-1000	0.10
1200-1700	0.15
1700-2000	0.15
2000-2300	0.20
2300-2700	0.25

Yantel Corporation

Add: 3F, Building 3, Southern District 2 of Zhongguan Honghualing Industrial Park, Xili, Nanshan, Shenzhen, China
Tel: 86-755-8355-1886 Fax: 86-755-8355-2533
For detailed performance specs & shopping online see Yantel web site : www.yantel-corp.com

Recommended PCB Layout

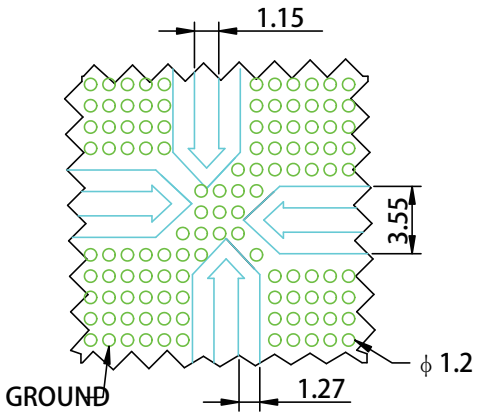

NOTE:

1. 50Ω line width is shown above designing from Rogres 5880 dieletric thickness 0.381mm; copper 0.5 OZ

2. Bottom side of the PCB is continuous ground plane.

Reflow Profile

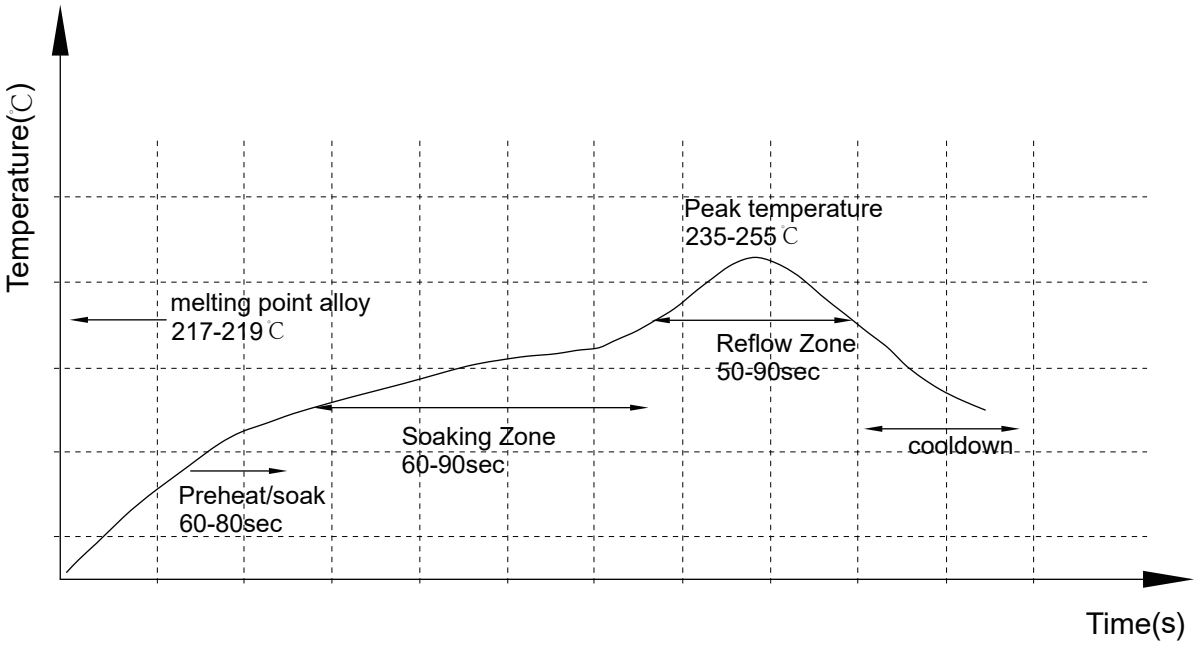

Reliability Test Flow

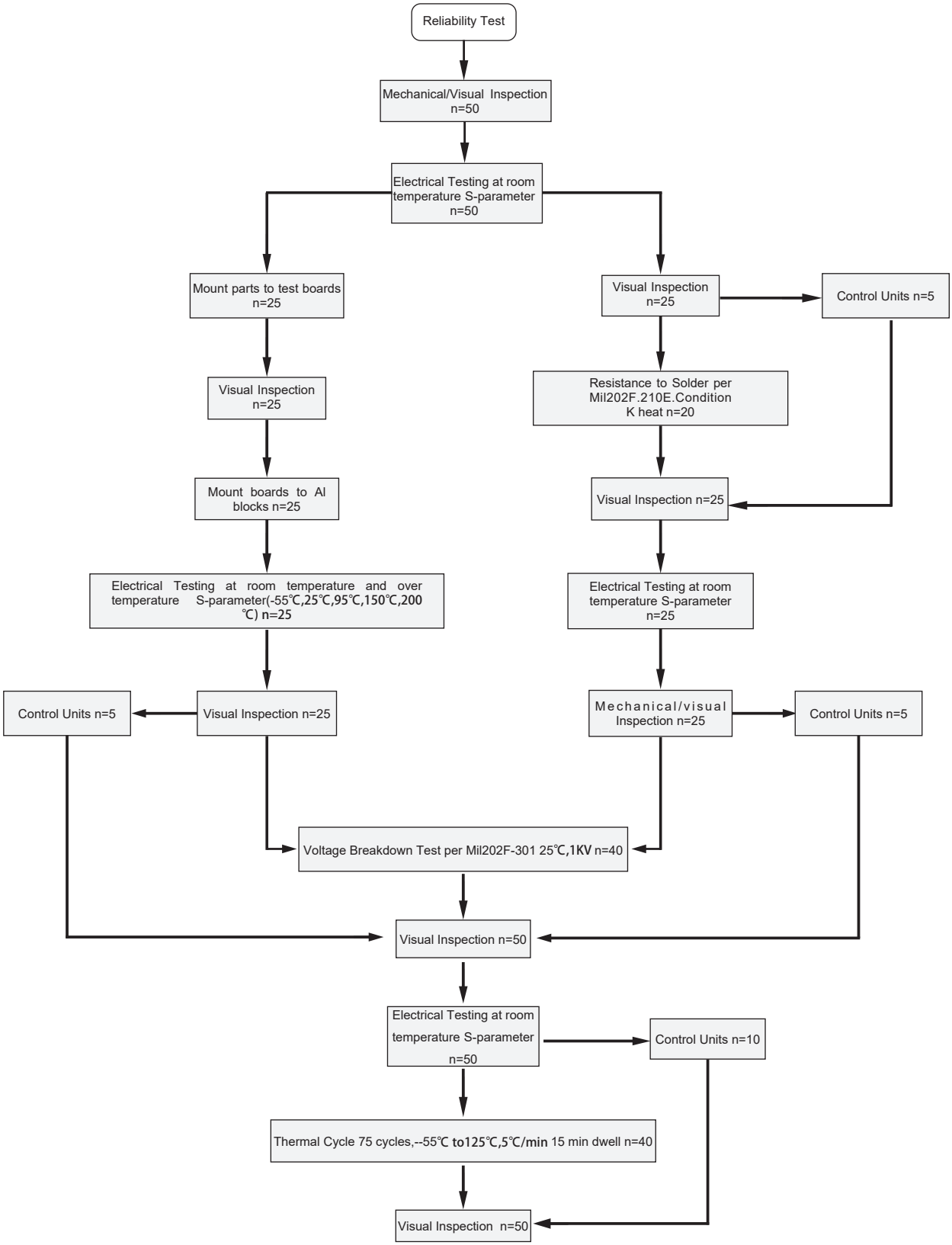

Reliability Test Flow

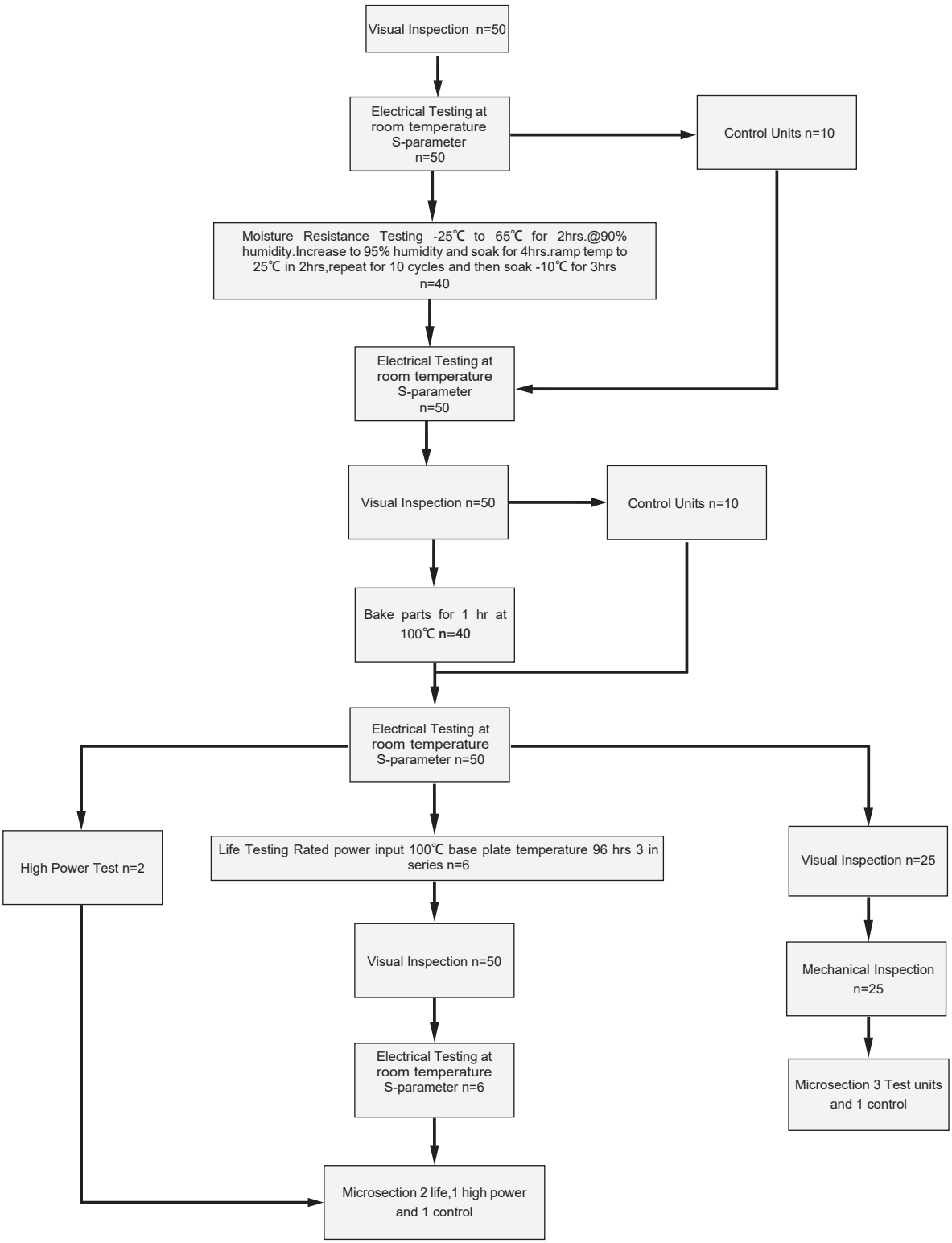

Yantel Corporation

Add：3F, Building 3, Southern District 2 of Zhongguan Honghualing Industrial Park, Xili, Nanshan, Shenzhen, China
Tel：86-755-8355-1886 Fax：86-755-8355-2533
For detailed performance specs & shopping online see Yantel web site : www.yantel-corp.com

HC0812W03

Preliminary Data sheet

Hybrid Coupler 3 dB, 90°

Rev A0

Tape and Reel Drawing

Feeding Direction

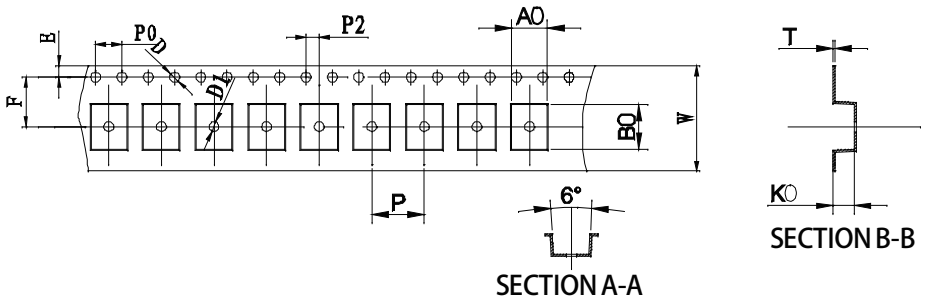

ITEM	W	A0	B0	K0	P	F	E	D	D1	P0	P2	T	7″
DIM(mm)	24.0	5.50	14.65	2.85	8.00	11.50	1.75	1.50	1.50	4.00	2.00	0.30	P/R
TOLE	+0.30 -0.30	+0.10 -0.10	+0.10 -0.10	+0.10 -0.10	+0.10 -0.10	+0.10 -0.10	+0.10 -0.10	+0.10 -0.00	+0.10 -0.00	+0.10 -0.10	+0.10 -0.10	+0.05 -0.05	800pcs

Notice:

A.10 Sprocket hole pitch cumulative tolerance is 0.2mm.

B. Carrier camber shall be not more than 1mm per 100mm through a length of 250mm.

C. All dimensions meet EIA-418-B requirements.

D. A0 & B0 measured as indicated.

E. K0 measured from a place on the inside bottom of the pocket to top surface of carrier.

F. Material: PS 100

G. Thickness: 0.30±0.05mm

H. 800 units (maximum) / T&R

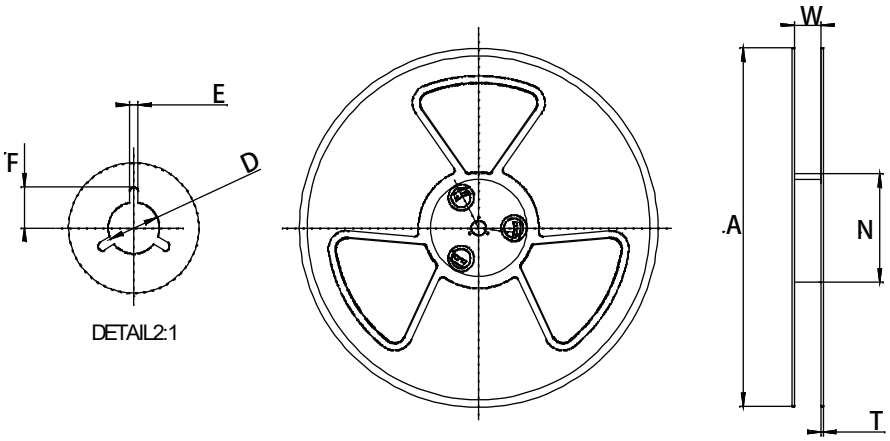

Symbol	Dimensions	
	(mm)	(inch)
W	24.5±0.4	0.965
A	177±0.5	7.0
N	63±0.3	2.48
T	1.8±0.2	0.071
E	2.1±0.3	0.083
F	10.75±0.3	0.423
D	13.5+0.5/-0.2	0.531

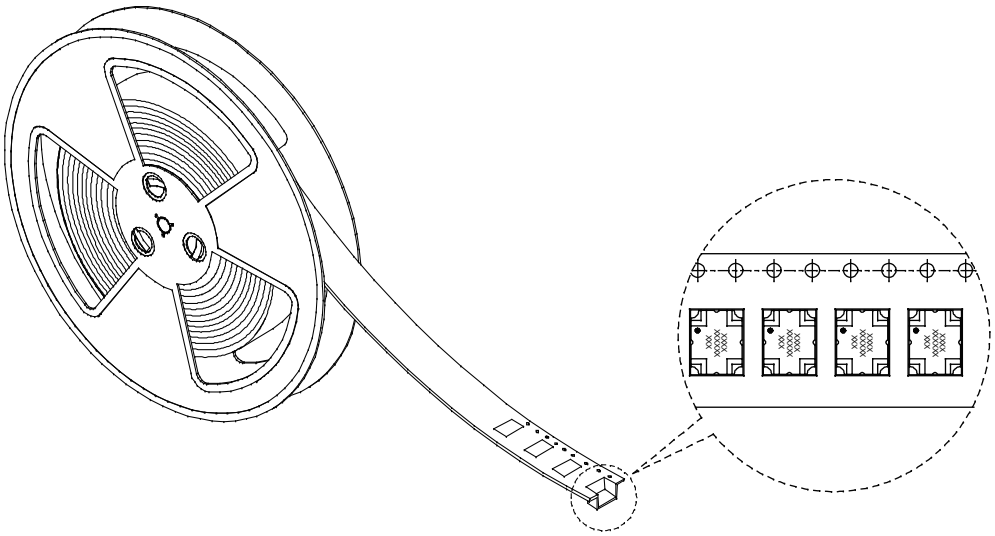

Yantel Corporation

Add: 3F, Building 3, Southern District 2 of Zhongguan Honghualing Industrial Park, Xili, Nanshan, Shenzhen, China

Tel: 86-755-8355-1886 Fax: 86-755-8355-2533

For detailed performance specs & shopping online see Yantel web site : www.yantel-corp.com