Data Sheet
DC4000U10-120
Directional Coupler
700 MHz-4.0 GHz

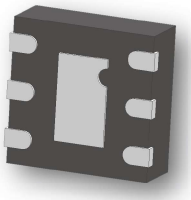

Features

- Small Size (2×2mm)
- Very Low Loss
- Excellent directivity
- Broad frequency coverage
- High Isolation
- Low VSWR
- Good Repeatability
- Tape & Reel
- Power handling:4 watts

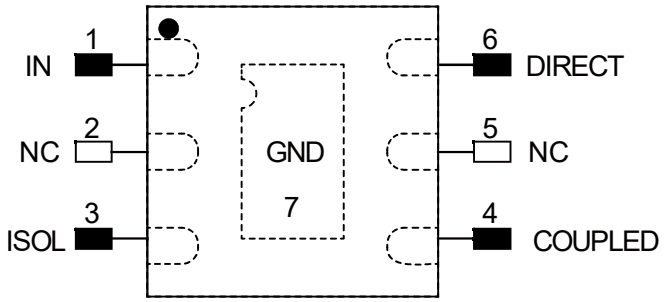

TOP VIEW

Applications

- Phase shifter / Attenuator
- Balanced amplifier / LNA configurations
- Modulators
- Mixers
- Power combining /dividing

Notes:

1.This part has passed through 100% RF test.

2. Suggest to add Capacitors of DC Blocker between Pins(with black color) and external circuit to prevent DC signal entry to guarantee parts normal work.

3. Suggest to add a TVS Diode in parallel between Eletrode (with black color) and Capacitor of DC Blocker to provide ESD protection for the product. TVS Diode use ON Semiconductor's ESD9101 is recommended.

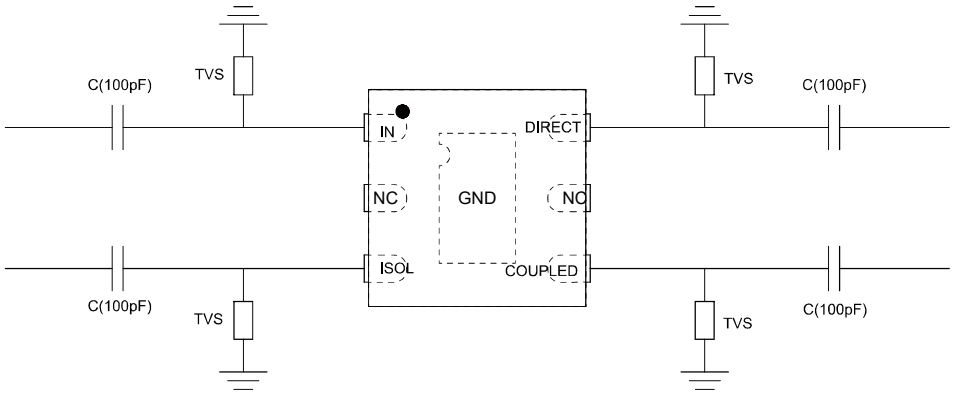

ESD Rating

Human Body Model (HBM): ≤ 650V in accordance with ANSI/ESD STM 5.1 - 2001

Machine Model (MM): ≤ 50V in accordance with ANSI/ESD STM 5.2 - 1999

Yantel Corporation

Add：3F, Building 3, Southern District 2 of Zhongguan Honghualing Industrial Park, Xili, Nanshan, Shenzhen, China

Tel：86-755-8355-1886 Fax：86-755-8355-2533

Data Sheet
DC4000U10-120
Directional Coupler
700 MHz-4.0 GHz

Electrical Specifications at 25º C

Part No.	Freq. Range (MHz) FL~FU	Power (W)	Size LxW (mm)	Coupling (dB)	Insertion loss (dB)	VSWR(:1)	Directivity (dB)
DC4000U10-120	700~850	4	2X2	26.2	0.21	1.07	20.1
	850~960			24.3	0.21	1.07	19.9
	960~1400			21.1	0.27	1.09	19.1
	1400~1700			19.6	0.31	1.09	19
	1700~2000			18.4	0.35	1.09	19
	2000~2700			15.3	0.46	1.07	19
	2700~4000			12.3	0.85	1.43	13.8

Typical Performance (-40°C, 25°C, 85°C: 700-4000 MHz)

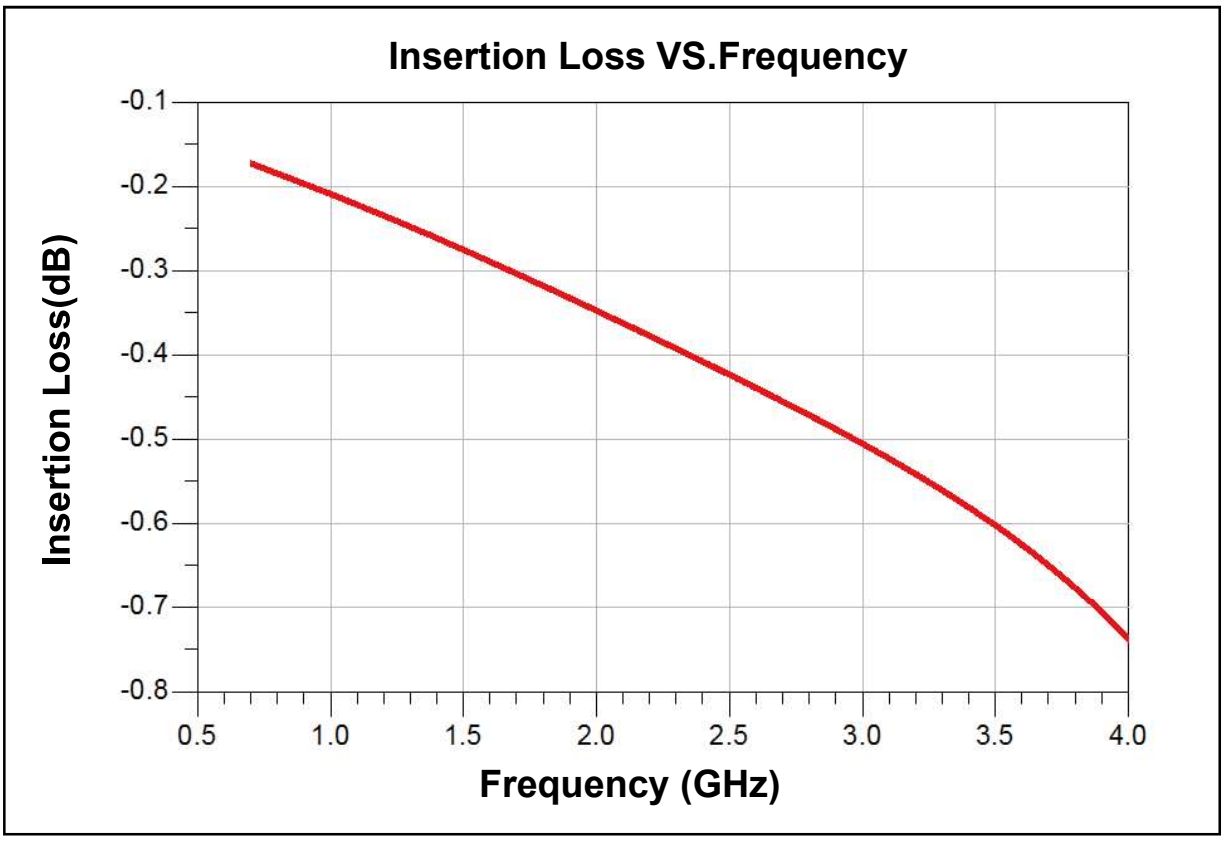

Yantel Corporation

Add: 3F, Building 3, Southern District 2 of Zhongguan Honghualing Industrial Park, Xili, Nanshan, Shenzhen, China
Tel: 86-755-8355-1886 Fax: 86-755-8355-2533

For detailed performance specs & shopping online see Yantel web site : www.yantel-corp.com

Data Sheet
DC4000U10-120
Directional Coupler
700 MHz-4.0 GHz

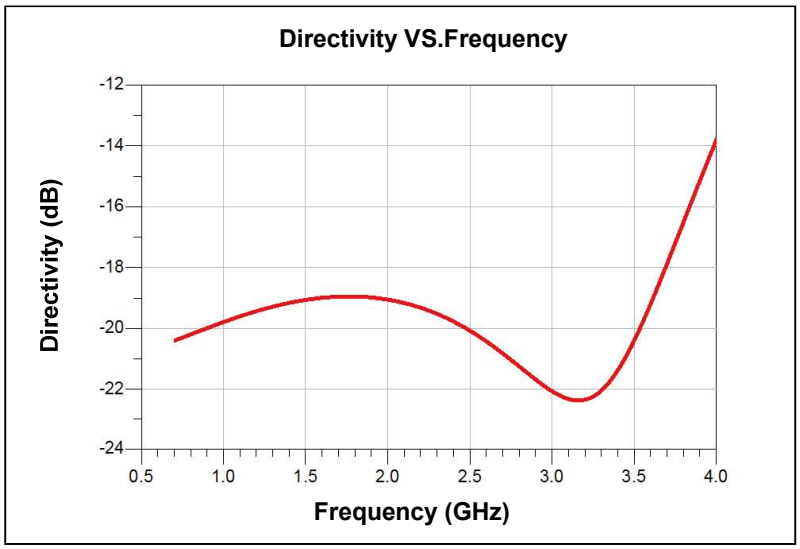

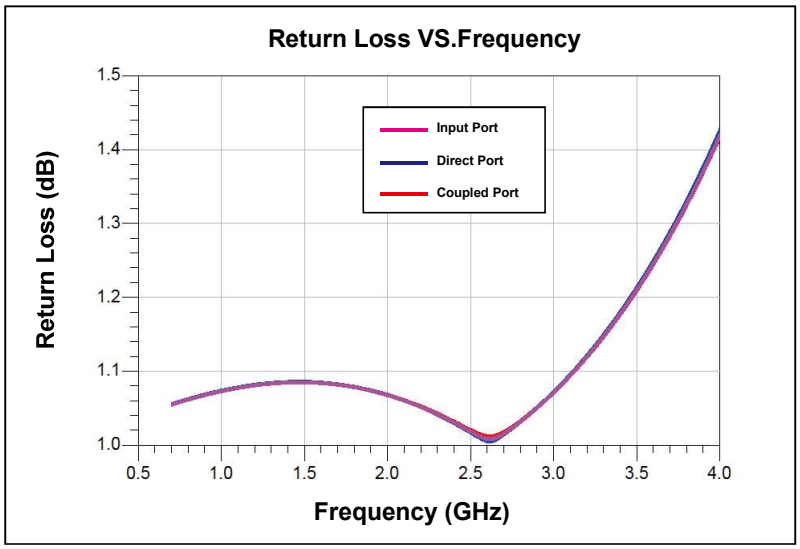

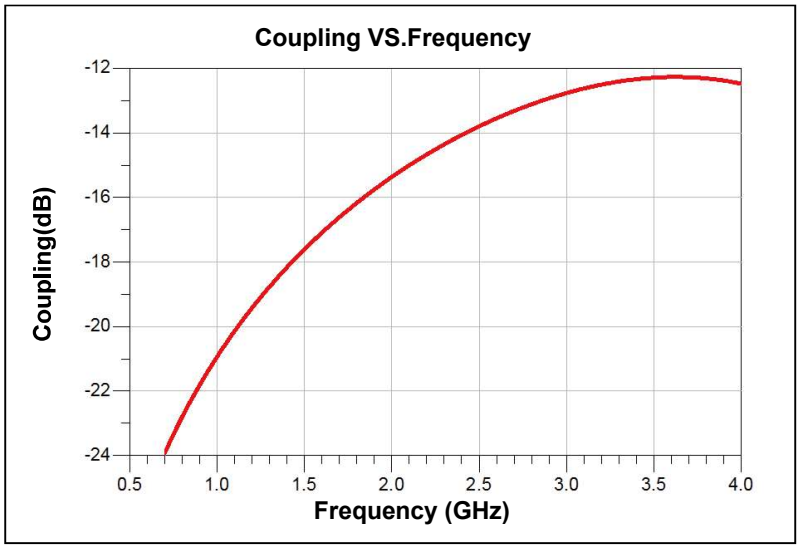

Yantel Corporation

Add：3F, Building 3, Southern District 2 of Zhongguan Honghualing Industrial Park, Xili, Nanshan, Shenzhen, China

Tel：86-755-8355-1886 Fax：86-755-8355-2533

Data Sheet
DC4000U10-120
Directional Coupler
700 MHz-4.0 GHz

Outline Drawing

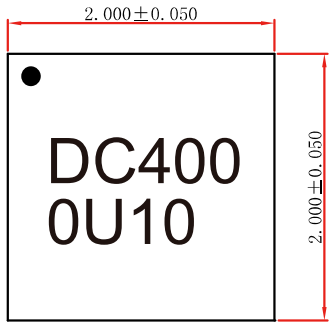

TOP VIEW

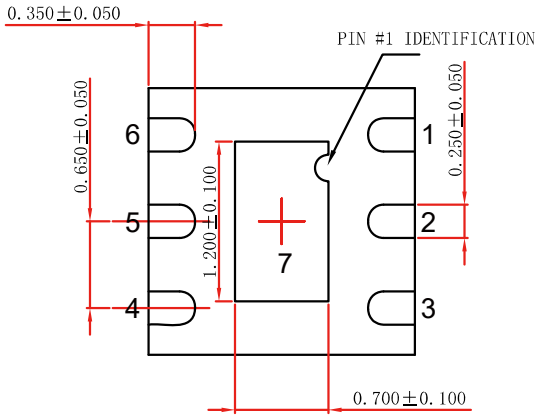

BOTTOM VIEW

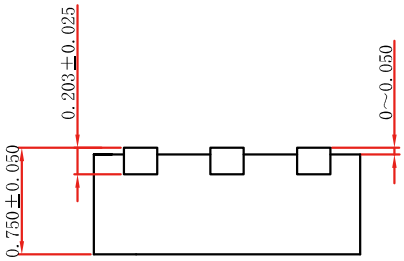

SIDE VIEW

Land Pattern

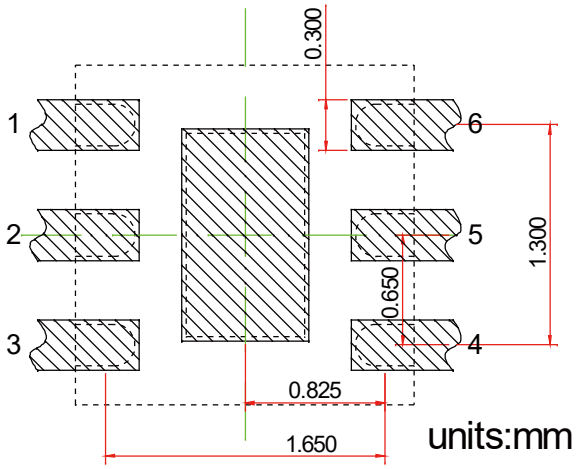

Recommended Land Pattern
Top View

Notes: All dimensions show in millimeters

Pin Out

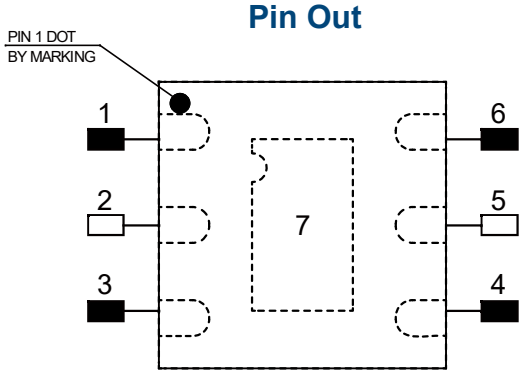

TOP VIEW

Notes:
1.Require to add Capacitors of DC Blocker between Pins(with black color) and external circuit to prevent DC signal entry to guranteeparts normal work.
2.This part has passed through 100% RF test.

Pin #	Connection
1	IN
2	NC
3	ISOL
4	COUPLED
5	NC
6	DIRECT
7	GND

Yantel Corporation
Add：3F, Building 3, Southern District 2 of Zhongguan Honghualing Industrial Park, Xili, Nanshan, Shenzhen, China
Tel：86-755-8355-1886 Fax：86-755-8355-2533
For detailed performance specs & shopping online see Yantel web site : www.yantel-corp.com