FAC6020

Fixed Attenuator

50Ω DC~60GHz 1.6W 20dB

Rev A0

Features

- Wideband, DC to 60 GHz
- High Power Handling, 1.6 W
- Excellent Return Loss
- 1.5x1.5 mm, 6-Lead QFN-Style Package
- Human Body Model (HBM): Class 2(> 2000 V)
- Charged Device Model (CDM): Class C3 (≥1000V)
- Moisture Sensitivity: MSL1

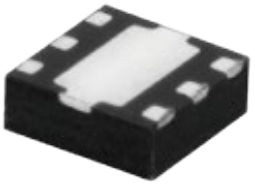



RoHS

REACH COMPLIANT

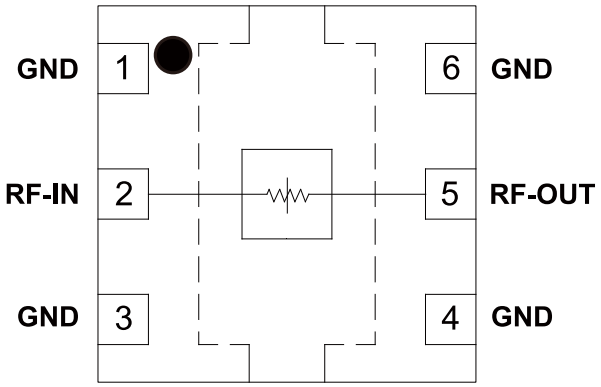

Applications

- Test & Measurement Equipment
- Satellite Communications
- Radar, EW, and ECM Defense Systems
- Telecom Infrastructure
- 5G sub-6 GHz and mmW

Electrical specifications at 25℃

Parameter	Frequency (GHz)	Min.	Typ.	Max.	Units
Frequency Range		DC		60	GHz
Attenuation	0.01-10 10-20 20-30 30-40 40-50 50-60	19.5 19.5 19.0 18.8	20.0 20.9 19.9 19.6 19.4 18.5	20.5 20.6 20.6 20.7	dB
Input Return Loss	0.01-10 10-20 20-30 30-40 40-50 50-60		22 22 25 18 18 15		dB
Output Return Loss	0.01-10 10-20 20-30 30-40 40-50 50-60		22 22 25 18 18 15		dB
Input RF Power			1.6		W
Operating & Storage Condition Operation Temperature Range: -45°C to +105°C Storage Temperature Range: -65℃ ~ +150℃					

Yantel Corporation

Add：No.308-322,3F,Building 1,Juchuang Jingu Innovation Park,Wenyuan Road 35,Xili Street,Nanshan,Shenzhen,China

Tel: 86-755-8355-1886 Fax: 86-755-8355-2533

For detailed performance specs & shopping online see Yantel web site : www.yantel-corp.com

FAC6020

Fixed Attenuator

50Ω DC~60GHz 1.6W 20dB

Rev A0

Outline Drawing (Units= mm [inches])

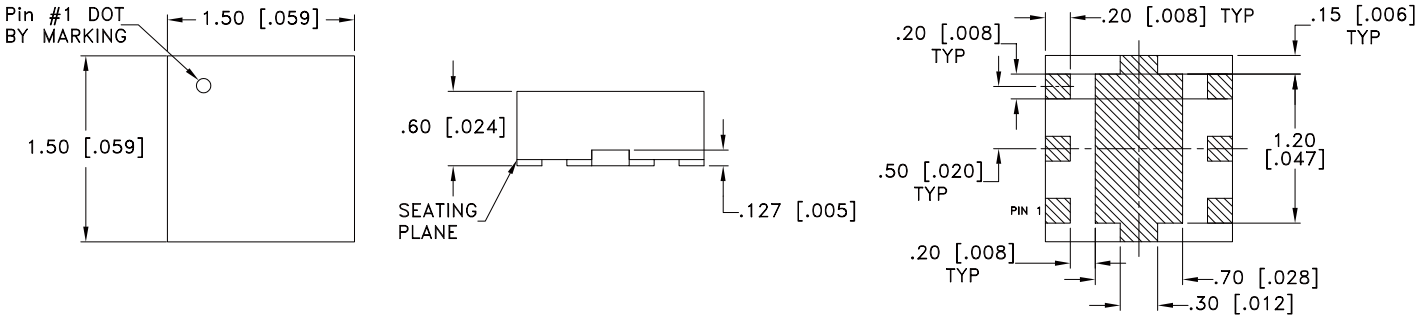

PCB Land Pattern (Units= mm [inches])

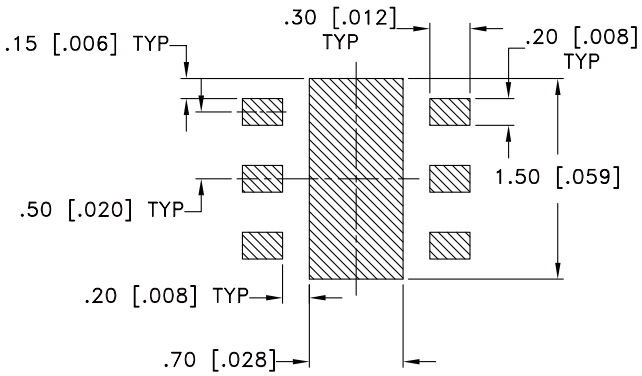

Suggested Layout,
Tolerance to be within ±0.050 mm

NOTES:

1. ▨ DENOTES METALLIZATION

Functional Diagram

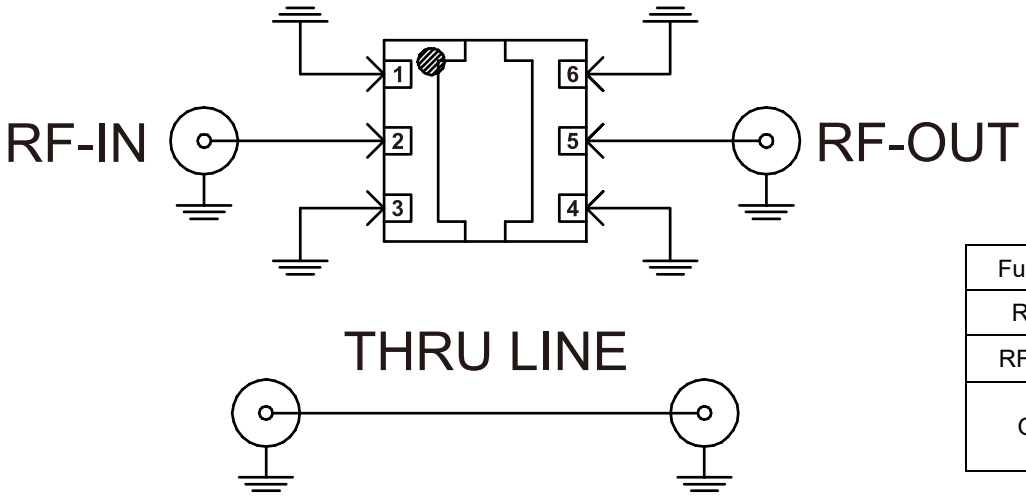

THRU LINE

Function	Pad Number
RF-IN	2
RF-OUT	5
GND	1, 3, 4, 6 & Paddle

Yantel Corporation
Add：No.308-322,3F,Building 1,Juchuang Jingu Innovation Park,Wenyuan Road 35,Xili Street,Nanshan,Shenzhen,China
Tel: 86-755-8355-1886 Fax: 86-755-8355-2533
For detailed performance specs & shopping online see Yantel web site : www.yantel-corp.com